# Maldives cable tray price customization price inquiry

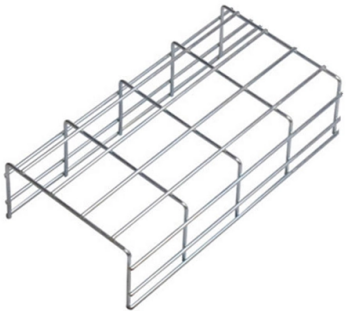

## Overview

Cable Tray Cable Tray (9'6") SKU: 98046 METAL Model no: GC01-01 Brand: CH&Q Color: SILVER Specifications CH&Q – Cable Tray Bundle Cable Tray + Connector +.

## Key Takeaways

Cable tray prices in the Maldives vary depending on material, size, and supplier, with options available from local hardware stores and international exporters.

### Local Suppliers and Online Stores

Asters Maldives offers metal and aluminum cable trays in 9'6" lengths, bundled with connectors and screws. Specific pricing is not listed online, but pre-order options are available, and customers can benefit from promotional savings. Brilltech Engineers supplies electrical cable trays in the Maldives and provides affordable pricing.

Orders can be placed via email, phone, or WhatsApp, making it convenient to request a custom quote.

### Blue

Sea Hardware and Sonee Hardware provide a range of electrical hardware, including cable trays, with competitive pricing and fast delivery within Male and Hulhumale.

© 2026 BAGYOU FIBRE NETWORKS - All rights reserved

### International Suppliers and Trade Data

Trademo lists cable tray manufacturers and suppliers for the Maldives, including shipment details and trade volumes. This platform is useful for bulk purchases or sourcing from global exporters.

### Recommendations for Price Inquiry

Contact suppliers directly via phone or email to get the most accurate and up-to-date pricing. Specify the material (metal, aluminum, PVC), length, and bundle requirements to receive precise quotes. For bulk orders, consider international suppliers through platforms like Trademo to compare costs and shipping options.

By reaching out to these suppliers, you can obtain current prices, availability, and delivery options tailored to your project needs in the Maldives.

## Article Content

Cable Tray

Cable Tray (9''6") SKU: 98046 METAL Model no: GC01-01 Brand: CH&Q Color: SILVER Specifications CH&Q – Cable Tray Bundle Cable Tray + Connector + Screw Brand: CH&Q Model: GC01-01 Color:

Reliable Solutions for Efficient maldives cable tray Management Globally

Discover high-quality maldives cable tray designed for efficient cable management, offering durability and easy installation. Ideal for enhancing organizational systems in commercial settings.

Durable PVC Electrical Cable Trays Affordable Prices from

Explore high-quality PVC Electrical Cable Trays designed for durability, corrosion resistance, and easy installation. Suitable for power, control, data, and instrumentation cables, these trays offer electrical

Maldives cable tray production line price

What are you looking for? Discover high-quality maldives cable tray production line price designed for efficient cable management, offering durability and easy installation. Ideal for enhancing

Best Frp Cable Tray in Maldives | Buy Bulk Frp Cable Tray from

Customize MOQ of Frp Cable Tray manufacturer from Maldives, deal with top Frp Cable Tray verified suppliers.

Maldives Cable Tray Suppliers Buyers & Importers

*© 2026 BAGYOU FIBRE NETWORKS - All rights reserved*

Connect with businesses actively looking to buy wholesale Maldives Cable Tray Suppliers at best prices.

Cable Tray In Maldives | Cable Tray Manufacturers Suppliers Exporters

As one of the noteworthy Cable Tray Exporters and Suppliers in Maldives, we are right here to serve you as promised. Give our experts a call or drop your enquiry to know more.

Cable Tray Price List 2024 PDF | PDF | Electrical Wiring | Wire

Price List Cable Tray 2024 - Free download as PDF File (.pdf), Text File (.txt) or view presentation slides online.

CH&Q (GC01-03) 11PCs Metal Cable Tray Bundle, Silver– Asters

CH&Q – Cable Tray Bundle. Cable Tray + Connector + Screw. Brand: CH&Q. Model: GC01-03. Color: Silver. Material: Metal. Includes: Cable Tray Size (W x D x H): 100 x 2900 x 50mm (3.9” x 9''6” x 2”)

Best Stainless Steel Cable Tray in Maldives | Buy Bulk Stainless Steel ...

Best B2B Platform to buy Bulk Stainless Steel Cable Tray in Maldives trusted wholesalers. Customize MOQ of Stainless Steel Cable Tray manufacturer from Maldives, deal with top Stainless Steel Cable

Maldives Cable Tray Suppliers Buyers & Importers

Sell Maldives Cable Tray Suppliers in bulk to verified buyers and importers. Connect with businesses actively looking to buy wholesale Maldives Cable Tray Suppliers at best prices.

Electrical Cable

Discover TVs, ACs, furniture, home appliances, mobiles, laptops, printers, and office supplies at great prices. Shop now for the best deals!

Maldives galvanized cable tray price inquiry | MaxTools Photonics

Maldives galvanized cable tray price inquiry These facts are updated till 28Feb2023, and are based on Volza''s Maldives Import data of Cable trays sourced from 70 countries export import shipments with

Maldives Cable Tray Suppliers Wholesale Suppliers, Manufacturers ...

Buy premium Maldives Cable Tray Suppliers in bulk from verified wholesale suppliers and manufacturers. Best prices, bulk discounts, trusted deals at go4WorldBusiness .

Ladder Cable Tray In Maldives

*© 2026 BAGYOU FIBRE NETWORKS - All rights reserved*

Buy Ladder Cable Tray in Maldives from Brilltech Engineers. A known Ladder Cable Tray Manufacturers Suppliers Exporters in Maldives offer best Ladder Cable Tray at affordable price

Cable Shop.Maldives | Male

ACL Electric Cables available Free delivery to any where in male and hulhumale Best quality and best price guaranteed Hotline. 7777395. Shop direct number 7777645 7777635 7777195 Cable

maldives-engineering-cable-tray-processing-price

20 Companies and suppliers for maldives-engineering-cable-tray-processing-price Find wholesalers and contact them directly Leading B2B martketplace Find companies now!

Reliable Solutions for Efficient maldives cable tray making machine ...

Discover high-quality maldives cable tray making machine price designed for efficient cable management, offering durability and easy installation. Ideal for enhancing organizational systems in

## Contact Us

Continue your research online:

Website: https://bagyou.es
Technical inquiry: https://bagyou.es/project-enquiry.html

This document is for preliminary research. Verify specifications against current standards, product documentation and project requirements.

*© 2026 BAGYOU FIBRE NETWORKS - All rights reserved*