Installing air switches in network server racks

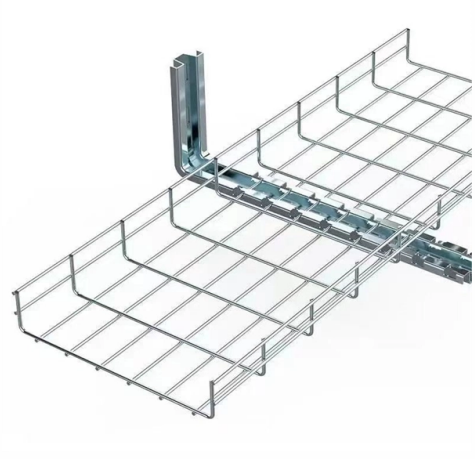

Overview

How to Plan a Server Rack Installation: A Beginner's GuideSetting up a server rack for the first time might feel a bit intimidating, but don't worry! This.

Key Takeaways

Proper installation of air switches in server racks requires secure mounting, correct placement for airflow, and effective cooling management to prevent overheating.

Rack Preparation and Mounting

Before installing switches, ensure the rack is sturdy, grounded, and free of debris. Use a standard 19-inch rack and verify that the total height of all switches does not exceed the available rack space, leaving room for cable routing and airflow. Place the heaviest switches at the bottom to maintain stability.

Slide rails or rack shelves can support the switches; if using slide rails, install them at the lowest possible position for single switches and follow manufacturer instructions for multiple units.

Airflow and Cooling Considerations

Network switches generate heat, so airflow management is critical. Position switches so that cold air enters from the front (cold aisle) and hot air exits to the back (hot aisle). Some switches have port-side intake or exhaust modules, which must align with the cold aisle for optimal cooling.

© 2026 BAGYOU FIBRE NETWORKS - All rights reserved

For racks where switches are mounted at the top or back, airflow can be restricted. Devices like Vertiv SwitchAir channel cool air from the front of the rack to the switch intakes, preventing hot air recirculation and reducing the risk of overheating. This passive airflow management improves efficiency and extends equipment lifespan.

Cable Management and Accessibility

Ensure adequate space around the rack for maintenance and cable routing. Use patch panels and cable organizers to reduce clutter and maintain airflow. Proper cable management also simplifies future upgrades and troubleshooting.

Best Practices

Verify rack depth and width match your switch dimensions and slide rail requirements. Maintain hot and cold aisle separation to optimize cooling. Record installation details and airflow configurations for maintenance and auditing.

Consider rack-mounted fans or ventilated panels if additional cooling is needed. By following these steps, you can ensure that air switches are securely installed, properly cooled, and easily accessible for maintenance, reducing the risk of network downtime and equipment failure.

Article Content

How to Plan a Server Rack Installation: A Beginner''s Guide

Setting up a server rack for the first time might feel a bit intimidating, but don''t worry! This guide will take you through all the essential steps, from organizing your devices to ensuring ...

How to mount switch in rack—Entire switch rack

Whether you''re setting up a new data center, a server closet, or a home lab, knowing exactly how to mount a switch in a rack is an essential skill.

Vertiv™ SwitchAir | Data Center Rack Cooling Solutions

The SwitchAir creates a barrier between switch air intakes and hot exhaust air in the back of server racks, while also guiding cool air from the cold aisle to the switch

Cisco Catalyst 9400 Series Switches Hardware Installation Guide

Planning a proper location for the switch and layout of the equipment rack or wiring closet is essential for successful system operation. These sections describe some of the basic site

3 Installing the Switch in a Rack

© 2026 BAGYOU FIBRE NETWORKS - All rights reserved

When populating empty chassis slots, start filling the upper slots first and work down to the bottom slots. This chapter describes how to install Catalyst 4500 series switches in a rack. For first-time

How SwitchAir Channels Cool Air Through Top-of-Rack (TORS)

A particular class of hardware—network switches—has challenged airflow conventions for a number of years. Network switch airflow patterns can vary considerably depending on manufacturer, model, and

1G_Swicth__AirDuct.book

For stacked installation of adjacent switch assemblies in a rack, the system on top should be installed without its floor, in order to allow easier access to the power supply units.

Prepare Switches | Validated Solution Guide

Review the Installation Guide before installing and deploying the switches. Carefully review requirements for power, cooling, and mounting to ensure that the data center environment is

How to Rack a Server: Step by Step Guide & Tips 2026

Racking a server is the process of installing a server into a rack using mounting rails, aligning and securing the chassis, and connecting power and network cabling.

Installing the switch into a 2-post rack

If you are installing the chassis into an ungrounded rack, you must attach a customer-supplied grounding wire to the chassis, as explained in Grounding the switch. However, if you are installing

How to Setup a Server Rack: Tips nd Tricks {Step-by

A server rack (or a server cabinet) holds and organizes IT equipment, such as dedicated servers and network switches. Installing a server

ITPro Today, Network Computing, IoT World Today combine

ITPro Today, Network Computing and IoT World Today have combined with TechTarget . The page you are looking for may no longer exist.

Installing a network switch on server rack 201703

Installing a network switch on server rack 201703 SuperSimple Howto Tutorial in Technology 8.71K subscribers Subscribe

How to Correctly Wire a Network Rack? – VCELINK

© 2026 BAGYOU FIBRE NETWORKS - All rights reserved

A network rack, also called a server rack, is a structure or framework designed to contain the network equipment (for example, routers, servers, switches, and patch panels).

3 Installing the Switch in a Rack

Rack-Mounting the Switch A standard rack-mount kit is included for mounting the switch in a standard 19-inch (48.3 cm) equipment rack with two unobstructed outer posts, with a nominal depth (between

Setting Up a Server Rack – Server Rack Installation

When the rack is mounted, it''s time to install servers and network equipment. When designing a rack layout, it is important to follow the

7 steps for organizing your server rack space

Immediately after installing the PDUs, you can install organizers to vertically organize the power cables and network patchcords in the server rack;

Server Rack Cabinet Installation Checklist

A successful rack server installation guide not only helps optimize equipment performance but also ensures long term scalability and safety.

Related Video Reference

This video was associated with the source search result. Verify technical details against current product documentation and project requirements.

Contact Us

Continue your research online:

Website: https://bagyou.es
Technical inquiry: https://bagyou.es/project-enquiry.html

This document is for preliminary research. Verify specifications against current standards, product documentation and project requirements.

© 2026 BAGYOU FIBRE NETWORKS - All rights reserved