Fiber Optic Cable Testing SDH

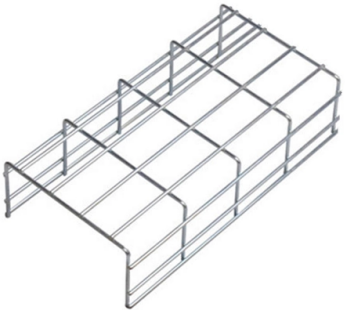

Overview

Fiber Testing | Fiber Optic Cable Testing Methods & Top ToolsFiber Optic Testing Fiber testing encompasses the processes, tools, and standards used to test.

Key Takeaways

Testing SDH fiber optic cables involves verifying signal integrity, measuring loss, and analyzing SDH traffic using specialized tools like OTDRs, insertion loss meters, and SDH analyzers. Key Testing Methods1.

End-to-

End Testing: Measures the overall light transmission and signal integrity across the entire fiber link, ensuring the SDH network can carry STM-1, STM-4, or STM-16 signals without degradation. 2.

OTD

R (Optical Time-Domain Reflectometer) Testing: Identifies faults, splices, and connector losses along the fiber.

OTD

Rs are essential for locating breaks or high-loss points in SDH fiber links. 3. Insertion Loss Testing: Quantifies the signal power loss caused by fiber, connectors, and splices.

This ensures the link meets SDH attenuation requirements for reliable transmission. 4. Return Loss and Reflectance Testing: Measures the amount of light reflected back toward the source, which can affect SDH signal quality, especially in high-speed STM-16 links.

© 2026 BAGYOU FIBRE NETWORKS · All rights reserved

SDH-Specific Testing Tools1.

SD

H Analyzers: Devices like the SDH-1620A or GL's SonetExpert™ allow field technicians to test STM-1 (155M), STM-4 (622M), and STM-16 (2. 5G) links. These analyzers can perform: End-to-end testingOverhead analysis (J0/J1/J2/S1/V5/C2 bytes)Remote loopback and online testing through optical splittersChannelized T1/E1 traffic analysis within SDH frames 2.

Multi-

Protocol Test Sets: Tools like the OTP6200 support SDH and Ethernet testing, allowing technicians to verify both physical layer performance and higher-layer traffic, including RFC 2544 tests for Ethernet over SDH networks.

Testing Procedures

Planning: Determine the fiber type, SDH interface (STM-1, STM-4, STM-16), and required performance standards. Reference Measurement: Establish a permanent link reference plane to account for fiber and connector attenuation. Physical Layer Testing: Use OTDR and insertion loss meters to verify fiber continuity, splice quality, and connector performance.

SD

H Traffic Testing: Connect SDH analyzers to measure overhead bytes, error rates, and channelized T1/E1 streams. Capture and playback traffic if needed for troubleshooting. Certification: Confirm that the fiber link meets SDH performance specifications and is ready for operational deployment.

Best Practices

Always test both ends of the fiber link to ensure accurate end-to-end performance. Use calibrated test equipment and follow manufacturer guidelines for SDH interfaces. Document all measurements, including insertion loss, OTDR traces, and SDH overhead analysis, for future maintenance and troubleshooting.

For high-speed SDH links (STM-16), pay special attention to return loss and connector quality to prevent signal degradation. By combining fiber optic physical layer testing with SDH traffic analysis, technicians can ensure reliable, high-performance SDH network operation across metro, access, and backbone networks.

© 2026 BAGYOU FIBRE NETWORKS - All rights reserved

Article Content

Fiber Testing | Fiber Optic Cable Testing Methods & Top Tools

Fiber Optic Testing Fiber testing encompasses the processes, tools, and standards used to test fiber optic components, fiber links, and deployed fiber networks. This includes optical and mechanical

SONET and SDH: A Comprehensive Tutorial

Explore SONET and SDH, physical layer standards for optical fiber communication. Learn about HDLC framing, key terminologies, rates, and the SONET STS-1 SDH frame structure.

Fiber Optic Cable Testing Methods |Fluke Networks

Fiber optic testing ensures the performance and reliability of fiber optic networks. These test procedures assess the physical and functional qualities of fiber optic cables, connectors, and the network as a

The FOA Reference For Fiber Optics

Many FTTx systems use APC (angled PC) connectors to reduce reflectance so test cables for both OLTS and OTDR need to have matching connectors. However, once installed, users on a live

Fiber Optic System Testing Tutorial

When a fiber optic system is successfully tested and determined to meet the customer''s specific requirements and relevant industry standards, the system performance and individual links

The FOA Reference For Fiber Optics

After fiber optic cables are installed, spliced and terminated, they must be tested. For every fiber optic cable plant, you need to test for continuity and polarity, end

Guidelines Corning Recommended Fiber Optic Test

2 Testing TIA-568.3-D states that there are two tiers of testing for fiber opt. c systems. The two tiers of testing are Tier 1 . nd Tier 2. Tier 1 testing is the minimum level of testing that i. required. This level of

NEXT-GEN SONET/SDH reference guide

SONET and SDH standards were developed for communicating digital information over optical fiber. The SONET specifications define optical-carrier (OC) interfaces and their electrical equivalents to allow

© 2026 BAGYOU FIBRE NETWORKS - All rights reserved

How to Test Fiber Cable Quality in Telecom Projects

Technical guide to testing fiber cable quality, covering visual inspection, optical loss testing, OTDR analysis, and standards for FTTH and data center network.

New hollow-core fiber test pushes internet speeds to 1.2Tb/s

China: Researchers transmit a whooping 51.3Tb/s through an optical fiber channel The test was carried out on the world''s longest commercial cross-border hollow-core fiber cable.

Networking Media Types: Copper, Fiber, and Power Line Basics

Fiber optic cables offer significant advantages over copper cables, including lower signal attenuation, immunity to electromagnetic interference, and the ability to support high-speed

AUA-9 1Mw Power FTTH Fiber Optic Optical Power Meter Cable Tester

Summary This type of Handheld optical power meter is a compact and an easy-to-use testing instrument for optical fiber networks, which can be used for absolute optical power measurements as well as for

Fiber Optic Cable Testing 101: Tools, Techniques, and Industry

Fiber Optic Cable Testing Ensures network reliability by using tools like visible light sources, power meters, and OTDRs to measure signal loss, identify faults, and maintain system

Fiber Optic Cable Supplier, Distributor

Stocking distributor of fiber optic installation tools, bulk fiber cables, fiber patch cables, test equipment, cable management, fiber optic training and more.

We are Nokia | Nokia

NZDF Optic Fiber We invent a new type of optical fiber, Non-Zero Dispersion Fiber (NZDF), that becomes widely deployed in

PDF document

PDF document PDF document Read this PDF document online, download the original file, and browse related details on device.report. Additional coding instructions can be found in the Article File chapter

Hiring Fiber Technician Jobs | Indeed

Fiber Deployment: Install, drop, and splice fiber-optic cables (FTTH) from the NAP pole to the subscriber''s premises. Hardware Setup: Configure Converge modems, routers, and switches for

© 2026 BAGYOU FIBRE NETWORKS - All rights reserved

fiber-optic-endface-inspection-instrument-calibration-in-tanzania ...

We are the leading cable pulling specialist in the Rhine-Main area, up to 30kV cables. We also offer blowing, splicing, and measuring of fiber optics, as well as pipe calibration and pressure... Other

Related Video Reference

This video was associated with the source search result. Verify technical details against current product documentation and project requirements.

Contact Us

Continue your research online:

Website: https://bagyou.es
Technical inquiry: https://bagyou.es/project-enquiry.html

This document is for preliminary research. Verify specifications against current standards, product documentation and project requirements.

© 2026 BAGYOU FIBRE NETWORKS - All rights reserved