Distribution boxes and incoming line cabinets

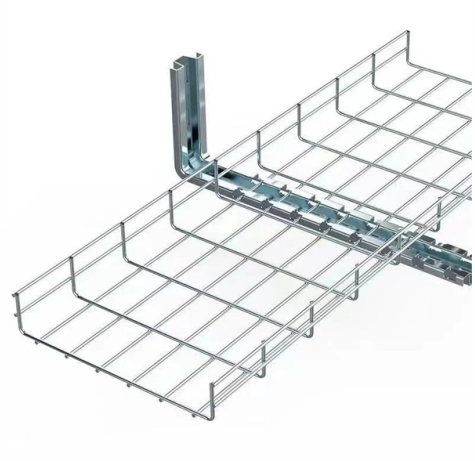

Overview

Distribution Box and Selection Guide: Internal Structure, Components. Learn how to choose a distribution box and understand its internal structure, inclu.

Key Takeaways

Distribution boxes distribute incoming electrical power to multiple circuits, while incoming line cabinets manage and protect the main power supply entering a system.

Distribution Boxes

A distribution box, also called a distribution board or panel, is the central unit that divides the main incoming electrical supply into smaller circuits for safe and efficient distribution. Key features include: Protective devices: Circuit breakers, fuses, and residual current devices (RCDs) prevent overloads, short circuits, and earth faults. Power balancing: Ensures even allocation of electricity across circuits to maintain efficiency and prevent overloading.

Applications: Used in residential, commercial, and industrial settings to provide stable operation for lighting, machinery, and high-power equipment. Distribution boxes are primarily concerned with power division and protection, allowing individual circuits to be isolated for maintenance without disrupting the entire system.

© 2026 BAGYOU FIBRE NETWORKS - All rights reserved

Incoming Line Cabinets

An incoming line cabinet (or incoming cabinet) is the switch cabinet that introduces power from the external supply network, often at medium voltage levels such as 10kV. Its main functions include: Power distribution: Directs electricity to busbars or downstream circuits. Protection: Equipped with vacuum circuit breakers, disconnectors, lightning arresters, and overcurrent/overvoltage protection devices to safeguard both equipment and personnel.

Monitoring and metering: Includes current and voltage transformers for measuring and monitoring electrical parameters. Additional safety features: Inrush current protection and standby automatic switching devices ensure reliable operation under load and during power interruptions. Incoming line cabinets are essential for centralized control, protection, and monitoring of the main power supply entering an industrial or utility system.

Key DifferencesFeatureDistribution BoxIncoming Line CabinetPrimary functionDivides incoming power into smaller circuitsIntroduces and protects main power supplyVoltage levelLow voltageMedium to high voltage (e.g., 10kV)ComponentsCircuit breakers, fuses, RCDsVacuum circuit breakers, disconnectors, transformers, lightning arrestersFocusPower distribution and protectionPower intake, monitoring, and comprehensive protectionApplicationsResidential, commercial, industrialIndustrial plants, substations, large-scale power systemsIntegration with Control SystemsDistribution boxes and incoming line cabinets often work alongside control boxes and switchgear to manage, automate, and monitor electrical systems.

While distribution boxes handle circuit-level power allocation, control boxes govern operation and automation of machinery, pumps, or industrial processes, often integrating PLCs, relays, and sensors.

Conclusion

Both distribution boxes and incoming line cabinets are critical for safe, reliable, and efficient power management. Distribution boxes focus on circuit-level distribution and protection, whereas incoming line cabinets handle main power intake, monitoring, and comprehensive protection. Selecting the right type depends on voltage level, application, and functional requirements.

© 2026 BAGYOU FIBRE NETWORKS - All rights reserved

Article Content

Distribution Box and Selection Guide: Internal Structure, Components ...

Learn how to choose a distribution box and understand its internal structure, including MCBs, busbars, neutral bars, earth bars, RCDs, RCBOs, SPDs, enclosure ratings, and wiring layout.

Distribution Box vs Control Box vs Junction Box: Key Differences and ...

Learn the differences between distribution boxes, control boxes, and junction boxes. Discover their functions, applications, and how E-abel provides customized electrical enclosure

Differences Between Distribution Boxes, Switchgear, Control Boxes,

Never use ordinary distribution boxes in dusty woodworking workshops; you must use control cabinets with better dust-proof sealing, otherwise, dust accumulation will cause circuit breaker tracking and fire.

The composition and function of incoming cabinet, outgoing cabinet ...

Function: It mainly distributes electric energy, distributes the main power supply to each branch switch, and connects and disconnects the branch power supply to each branch passing by the overload

Electrical Control Panels & Distribution Boxes: Sizes,

Learn about control panels, breaker boxes, junction boxes, and custom enclosures. Explore standard panel sizes, applications, and key

Guardians of the Grid: 6 Core Electrical Cabinets

Discover the 6 core electrical cabinets (incoming, outgoing, etc.) that protect your power system. Weishoelec reveals their vital roles in ensuring

Electrical Distribution Boxes -ZHENGKAI

Discover electrical distribution boxes types, components (MCB, RCCB, RCBO, SPD, busbar) and functions. Get expert selection guidance and

Understanding Distribution Boxes:A Comprehensive Guide

Understanding its significance, this article covers what a distribution box is, how it functions, its structure, the various types available, and how it

Distribution Box Guide: Types, Components & Solutions

Understand distribution boxes (DB boxes) in 5 minutes. Learn about types, components, functions, and uses. Find the perfect DB box for your needs.

© 2026 BAGYOU FIBRE NETWORKS - All rights reserved

Incoming Cabinets: The First Line of Defense in Power Distribution

Discover the integral role of incoming cabinets in power distribution, ensuring stable and safe electrical supply. Learn about voltage regulation, circuit protection, and load balancing for

The composition and function of incoming cabinet, outgoing cabinet ...

The power supply system is used to bring high voltage through transformer step-down to the required voltage level of the user and is equipped with protection, metering and distribution of the indoor

Control Cabinet, Distribution Box, Incoming Line Cabinet, Complete

Control Cabinet, Distribution Box, Incoming Line Cabinet, Complete Set of Distribution and Transmission Equipment Low-Voltage AC Ggd Distribution Cabinet Set, Find Details and Price about Control

Distribution board

A distribution board (also known as panelboard, circuit breaker panel, breaker panel, circuit breaker, electric panel, fuse box or DB box) is a component of an electricity supply system that divides an

How to determine the size, installation method and wiring mode of ...

(1) Wiring method of distribution box 1) Generally, the incoming line of power distribution box adopts five wire system, that is, a, B and C three-way phase line (the general color is yellow, green and red),

Detailed Explanation of the Composition and Function of the Inlet ...

Function: The main function is to distribute electricity, the incoming cabinet is generally equipped with vacuum circuit breaker as a breaking purpose, vacuum circuit breaker has short

15kv 22kv High Voltage Incoming and Outgoing Panel

15kv 22kv High Voltage Incoming and Outgoing Panel Cabinet Swithgear Distribution Panel Box, Find Details and Price about Distribution Box Cable

How to choose the incoming line method for high and low voltage ...

3. Side entry line Side incoming line refers to the power supply being connected through the bus duct or cable on the side of the cabinet. *Advantages: High flexibility, easy to achieve parallel

The main components and functions of low-voltage power distribution ...

© 2026 BAGYOU FIBRE NETWORKS - All rights reserved

First, the main components of low-voltage power distribution cabinet The low-voltage power distribution cabinet is mainly composed of an incoming line cabinet, an outlet cabinet, a

Contact Us

Continue your research online:

Website: https://bagyou.es
Technical inquiry: https://bagyou.es/project-enquiry.html

This document is for preliminary research. Verify specifications against current standards, product documentation and project requirements.

© 2026 BAGYOU FIBRE NETWORKS - All rights reserved